- Voltage 150 to 400 V_{DC}
- Power up to 1500 W
- Power density 400 W/ltr
- 19” or wall mount
- Digital or analogue control
- Custom built options

Short description

The power supply E1k-HV provides a PFC (Power Factor Correction) in its mains input to meet the standard EN61000 part 3-2.. The primary-secondary conversion working in phaseshift mode empowers an efficiency factor up to 92%.
It can be used as a voltage or current source with various optional features, thus offering a wide range of possible applications.
The decoupling diodes allow redundant operation, the modules may work with or without system monitoring.

System

- Mounting as 19“-module or on mounting plate / DIN rail
- Usable as power supply or battery charger
- Analogue control of voltage and current
- Digital control via I²C- bus
- System monitoring and control via LC- display and other interfaces
- Individual layouts by custom built variations

Variation	Voltage	Current	Mechanics
E1k-HV/V570	200 V	7 A	26 HP / wall mount / rack mount
E1k-HV/V579	220 V	6,5 A	26 HP / wall mount / rack mount
E1k-HV/V512	250 V	5,5 A	26 HP / wall mount / rack mount
E1k-HV/V562	200-300 V	5 A	26 HP / wall mount / rack mount
E1k-HV/V519	400 V	3,5 A	26 HP / wall mount / rack mount
E1k-HV/V575	150-400 V	0,1-1,25 A	26 HP / wall mount / rack mount, current source
Further variations on demand			

Input

Input voltage nom.	230 V_{AC} / 220 V_{DC}
Input voltage range	90 – 265 V_{AC} 110 V_{DC}: Power derating 50%
Input current	<15 A_{pk}, limited by thermistor
Inrush current	<16 A_{pk}
Input power	Max. output power +15%
Input frequency	47 - 63 Hz or DC
Power factor	0.99 at maximum load
Hold-up time	>10 ms at nominal load and voltage
RFI-protection, isolation, leakage current, overshoot and transient response	See respective standards

Output

Output voltage	See chart page 1, up to 400 V
Output current	See chart page 1, up to 10 A
Ripple rms/pp	<0.2% rms; <1% pp (freq. range 30 Mhz)
Dyn. load regulation	± 2% power deviation 40% / 60%
Load regulation	1%
Line regulation control	0.02%
Parallel operation	Possible, option decoupling diode
Efficiency	Up to 92% (see diagram page 7)
Temperature compensation	-5 mV/K/cell, -20 °C to +50 °C (option battery charger)
Charger characteristics	IU (DIN41773) (Option battery charger also without system monitoring)

Ambient conditions

Temperature range	0 °C to 50 °C/
Storage temperature range	-20°C to +85°C
Humidity	0 – 90% non-condensing

Standards

Low voltage directive	2006/95/EG
Safety	EN 60950-1, EN 61010-1
High voltage test	EN 60950-1 compliant
Clearance and creeping distances	8 mm input output / 4 mm input – chassis / 4 mm output – chassis
Leakage current	< 3.5 mA at 50 Hz and 265 V_{AC}
PFC	EN 61000-3-2
EMC (electromagnetic compatibility)	acc. 2004/108/EG
ESD	EN 61000-4-2: 4/ 8 kV
Burst	EN 61000-4-4: 2 kV
Surge	EN 61000-4-5
RFI	EN 55011 class B
Appliance class	Class I
Ingress protection rating	IP20

Protection

Current limiting	Constant current >105%	
Power limiting	105% ±5%	
Overvoltage protection	105–130%, depends on variation	resettable by input voltage disconnection
Overtemperature protection	>50 C internally limited	resettable by cooling down

Interfaces and signals

LED green	Power supply in normal operation
LED red	Overtemperature
Power Fail	Optional
Remote On/Off	Optional
Failure relay	Optional; control or temperature sensor out of range
Voltage control	Analogue (5/10 V or 20 mA) , optional
Current control	Analogue (5/10 V or 20 mA) , optional
Output voltage monitoring	Optional
Output current monitoring	Optional
I²C-Bus	Optional
CAN2.0	Optional
Temperature sensor	10 mV/K (option battery charger)
Voltage depression	Via low- signal (e.g. optocoupler)
Constant current mode	TTL-signal: High (option)

Mechanics/ Mounting

Cooling system	Internal fan, temperature controlled
Dimensions	See drawing
Weight	3.3 kg

Mechanics E1k-HV 19“ / 3U / 26HP (Standard Series)

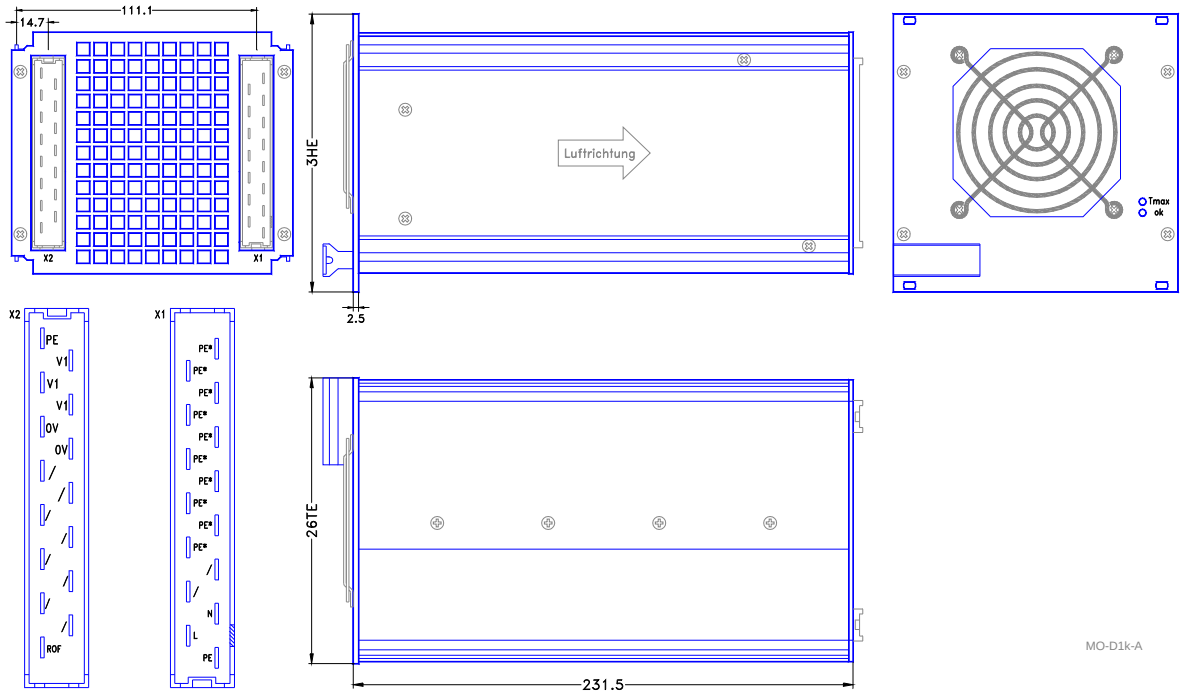

Mechanics E1k-HV Wall Mount/ Rack Mount

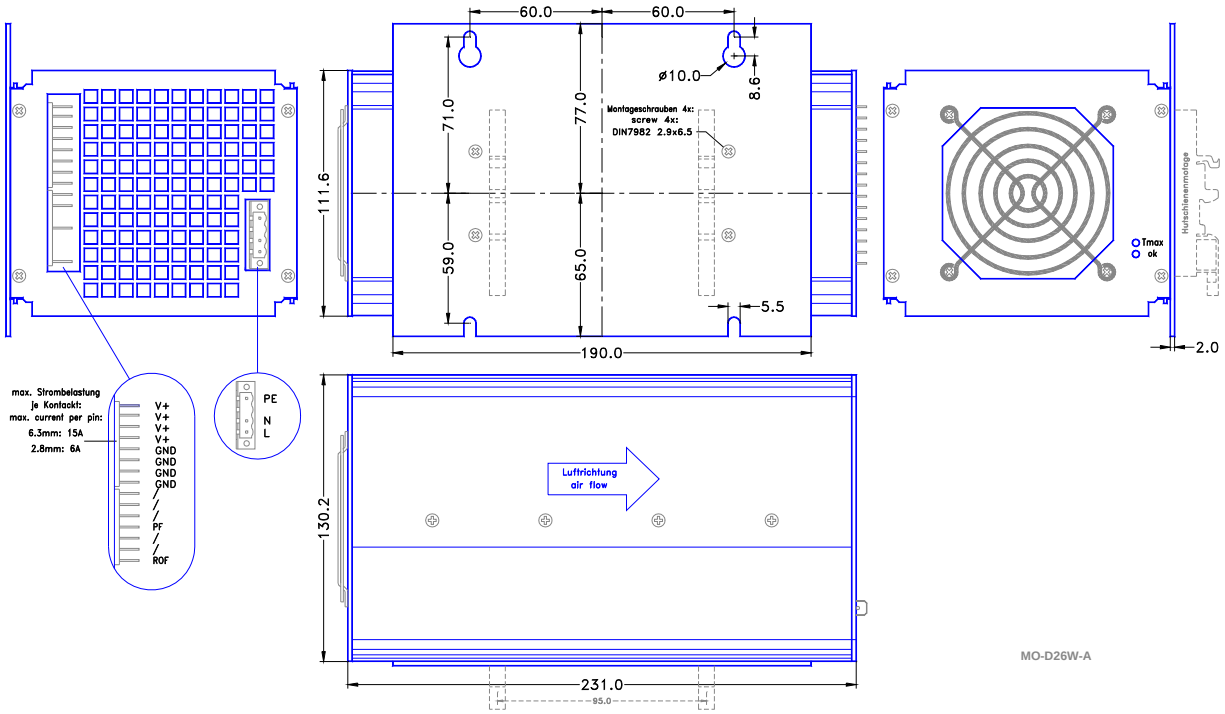

Block Diagram E1k-HV Power Supply (Standard Series)

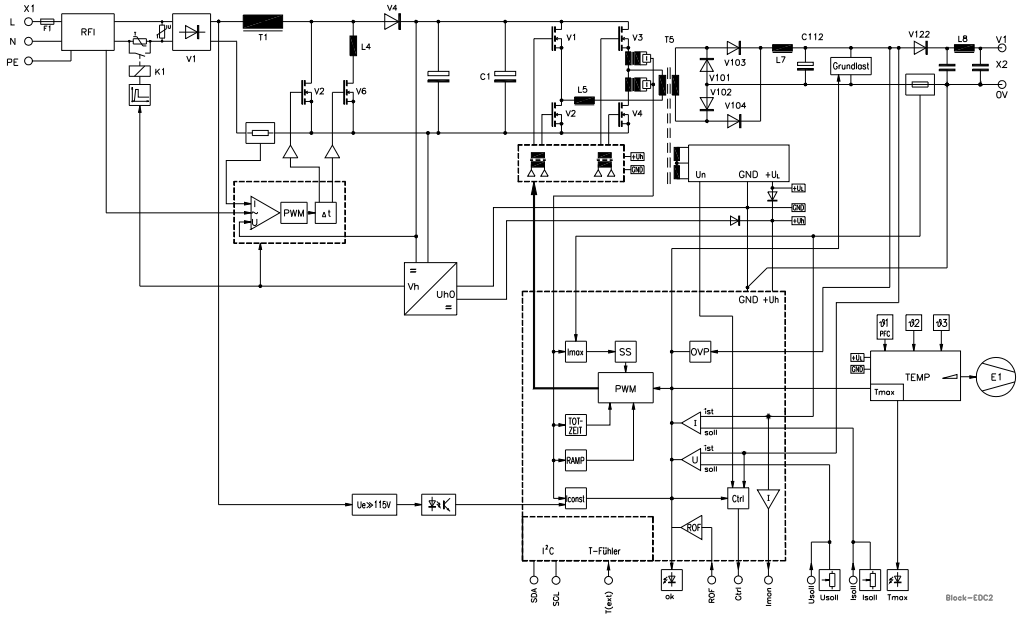

Efficiency (U_{out}=300 V)

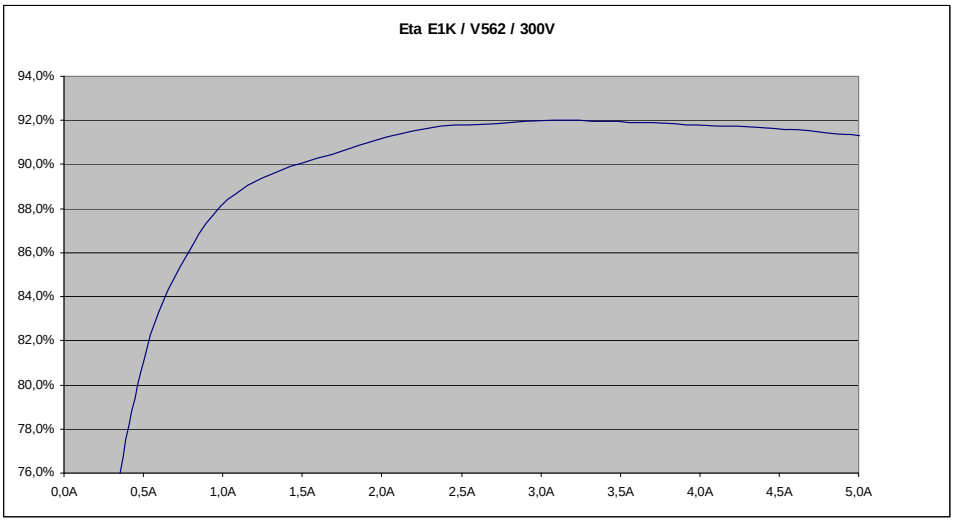

Interfaces

Input socket See drawing

DIN 41612 H15	30	26	22	18	14	10	6	
	L		(PE)	(PE)	(PE)	(PE)	(PE)	

PE	N		(PE)	(PE)	(PE)	(PE)	(PE)
32	28	24	20	16	12	8	4

Output socket See drawing

DIN 41612 H15	30	26	22	18	14	10	6	
	V1	V1	0 V	/	(Ctrl)	(Imon)	(Gnd)	

PE	V1	0 V	/	(Gnd)	(Isoll)	(Uh)	Rem. on/off
32	28	24	20	16	12	8	4

Alternative digital Model with I²C Bus:

Pin	Standard	mit I²C
4	Rem. on/off	T+
6	Gnd	Gnd
8		
10		
12		I²C-SCL
14		I²C-SDA
16		

QUEL Produktions- und Vertriebs-GmbH,
Hans-Sachs-Str. 2, 63755 Alzenau

Telephone +49 (6023) 9798-0, Fax: +49 (6023) 9798-18
Email: info@quel.de, Internet: www.quel.de

Subject to change. Data sheet **E1k-HV**. Mod 2 - 13.11.2017
DS_E1k-HV.doc
Author: EK