- Weight only 4.0 kg
- Power up to 3000 W
- Power density 650 W/l
- Efficiency up to 93%
- AC- and DC-Input
- Externally controllable

Description

The power supply E3 provides a PFC (Power-Factor Correction) in its mains input to meet the standard EN61000 part 3-2. Also a DC input voltage between 110-220 V is possible. The primary-secondary conversion working in resonant phase shift mode allows for an efficiency up to 93 %. The power conversion is controlled completely digitally by a digital signal processor. The PSU can be used as a voltage or current source with various optional features, thus offering a broad range of possible applications.

Options

The PSU is available as 1800 W up to 3000W series. It can be controlled via analogue or digital interface (I²C, CAN). Deactivation is possible by remote On/Off input. Power-Fail or DC-Fail can be realised also as relay contact; current or voltage monitor signals can be lead through.

Variations

max. 3000 W
max. 80 A
max. 140 V

Voltage- and Current Source

Variation	voltage max	current max	power max	Design
E2k/V584A	15 V	80 A	1200 W	28 TE / wall mount / rack mount
E3k/V584	30 V	80 A	2400 W	28 TE / wall mount / rack mount
E3k/V574	60 V	48 A	2700 W	28 TE / wall mount / rack mount
E3k/Vx	60 V	55 A	3000 W	28 TE / wall mount / rack mount
E3K/V613	135 V	21,5 A	2900 W	28 TE / wall mount / rack mount

Input

Input voltage nom.	230 V_{AC} / 220 V_{DC}
Input voltage range	90 - 265 V_{AC} , 90 V_{AC}: Power Derating max. 16A input current 100 – 375 V_{DC}, 110 V_{DC}: Power Derating max. 16A input current
Input current	<20 A
Inrush current	<16 A_{pk} limited by thermistor
Input power	Max. output power +10%
Input frequency	47 - 63 Hz or DC
Power factor	0.99 at maximum load
THD	<5% above 1700W at 230V

Output

Output voltage	Max. 150 V, see table
Output current	Max. 80 A, see table, more variations on demand (over 60 A only with conductor line and screwed connection)
Ripple	<0.2% rms; <1% pp (freq. Range 30 MHz)
Dyn. Load regulation	±1% power deviation 40% / 60%
Line regulation control	<0.1%
Load regulation	1%
Temperature coefficient	0.02%/°K
Sense connections	Optional
Hold up time	>10 ms at nominal output voltage and full load
Parallel operation	Possible (internal decoupling circuitry)
Charge characteristic	IU (DIN41773)
Temperature compensated charging voltage	2.3 V per cell at 20 °C
Temperature compensation	-5 mV/K/cell (-20°C to +50°C)
Efficiency	typ. 92 - 93%

Ambient Conditions

Environmental temperature range	0°C to 45°C (up to 60°C with power derating at over-temperature in the unit)
Storage temperature range	-20°C up to +85°C
Humidity	0 – 90% non-condensing

Standards

Safety	EN 60950, EN 61010
High voltage test	EN 60950 compliant
Clearance and creeping distances	8 mm input - output / 4 mm input - chassis / 2 mm output – chassis
Leakage current	< 3.5 mA at 50 Hz and 265 V_{AC}
PFC	EN 61000-3-2
EMV	2004/108/EG
ESD	EN 61000-4-2: 4/8 kV
Burst	EN 61000-4-4: 2 kV
Surge	EN 61000-4-5
RFI	EN 55011 (class B)
Appliance class	Class I
Ingress protection rating	IP20
Low voltage directive	2006/95/EG

Protection

Overvoltage protection	105 – 130%, depends on variation, resettable by input voltage disconnection
Overtemperature protection	>50 C internally limited, resettable by cooling down

Interfaces and signals

LED1 green	Power supply in normal operation
LED2 yellow	Warning, e. g.: high temperature, fan breakout (optional adaptable)
LED3 red	Error
Power Fail	Optional
Remote On/Off	Optional
DC-Good-Relays	Potential free changeover contacts (60 V / 1 A) optional
Voltage control	Analogue (5/10 V or 20 mA) or digital, optional
Current control	Analogue (5/10 V or 20 mA) or digital, optional
Sense input	Optional
Output monitoring	0 – 3.3 V for current, voltage, power (optional)
I²C-Bus	
CAN2.0	Optional instead of I²C
Serial bus	RS232 with 0 / 3.3 V , optional
Synchronization	Input and / or Output (optional)

Mechanics / Mounting

Cooling system	Internal fan, temperature controlled
Mounting	19″- rack, DIN-rail- or wall mounting **Custom built application design-in on demand!** Tabletop unit with operating panel
Dimensions	See drawing
Weight	4.0 kg

Mechanics E3k 19“ / 3 U / 28 HP

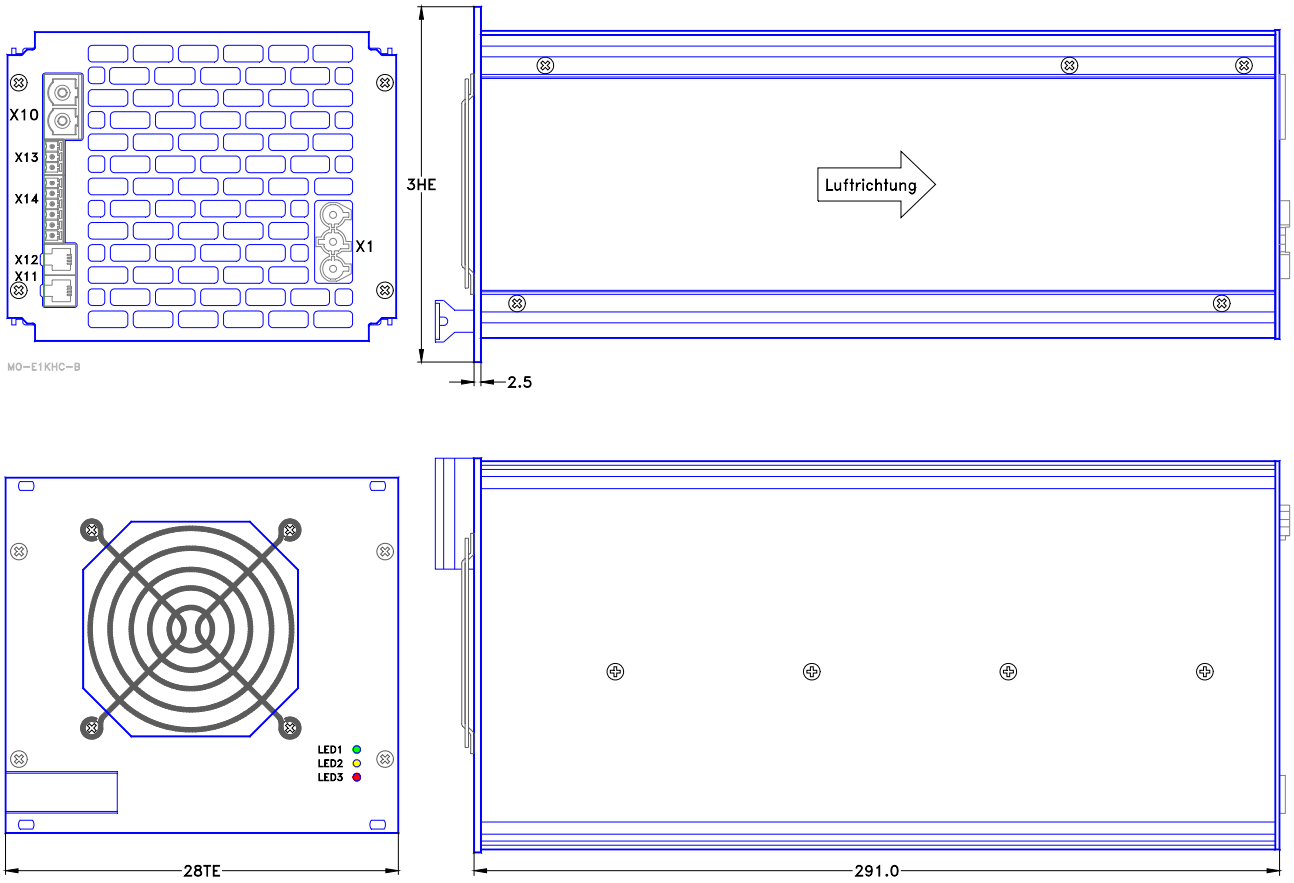

Mechanics E3k 19” / 3 U / 28 HP Option power rail and reverse air flow

Block diagram E3k-power supply (with options)

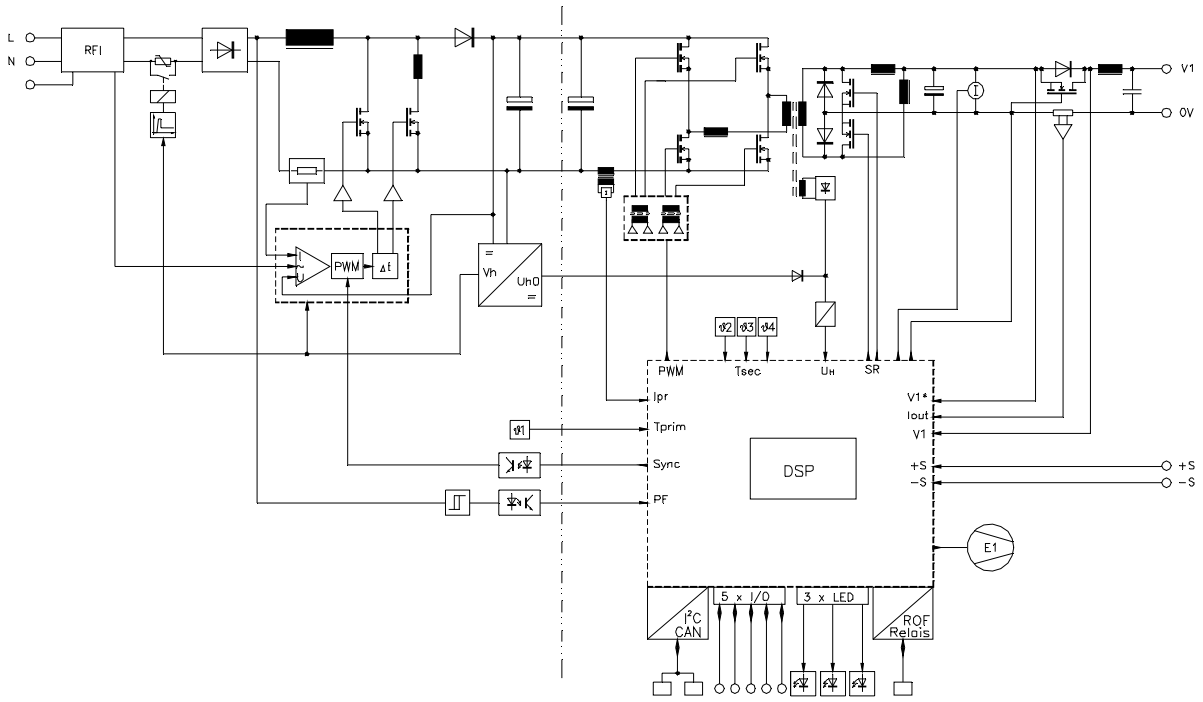

Efficiency

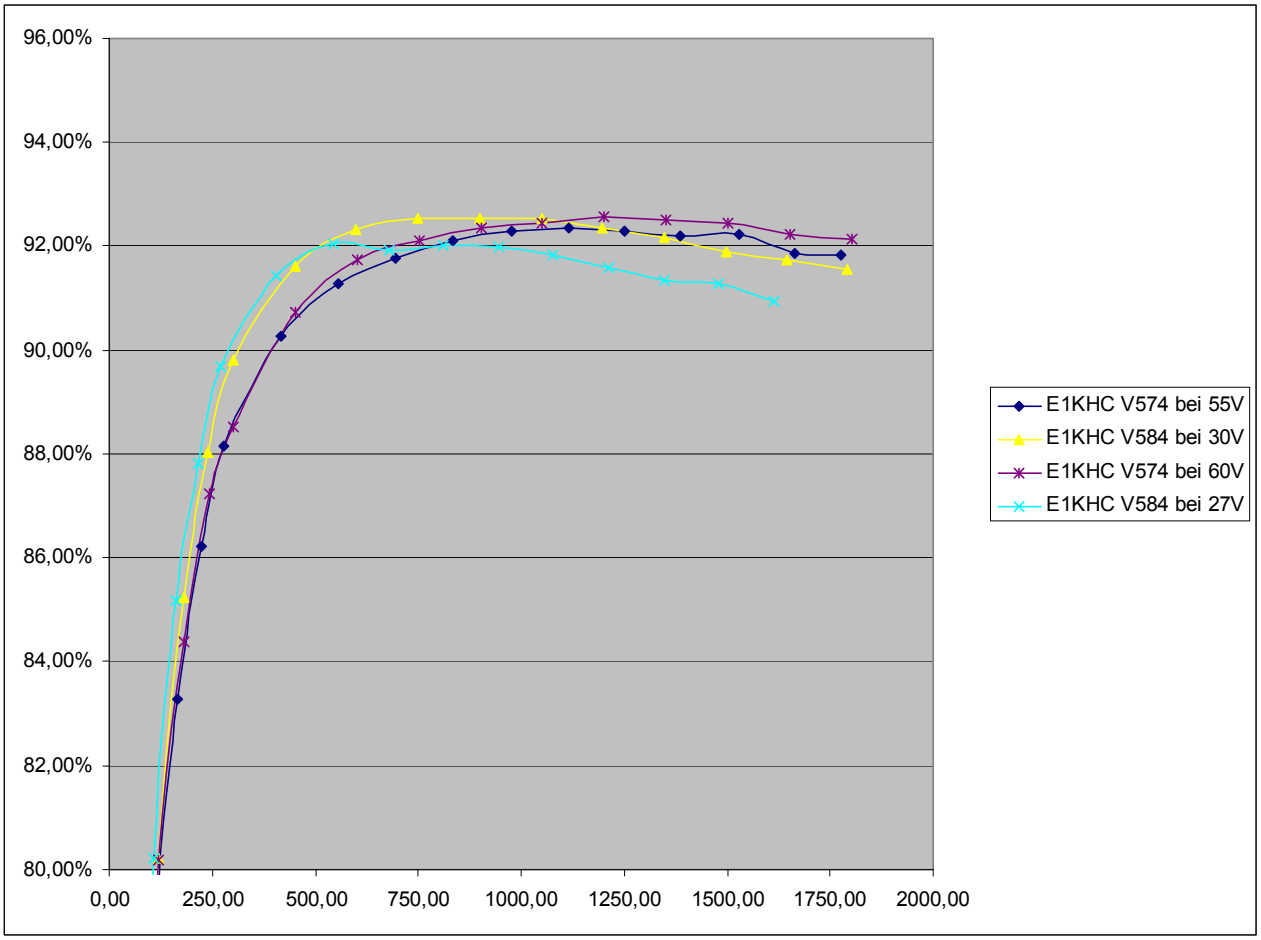

Connectors

Input connector X1	Adels AC166 GEKST/3 Mating plug: Adels AC166 GBUF / 325 (Order Nr. XNG3FZ)
Output connector X10	Phoenix PC6-16 Mating plug: PC 6/2-ST-10,16 (30 A) (Order Nr. XPC6S2) PC 16/2-ST-10,16 (60 A) Optional: screw connections M 5
Communication jack X11/X12	RJ10 (modular connector 4P4C) Connector Cable (Best. Nr. WLICXX) WLIC02:1:1 RJ10 20cm WLIC05:1:1 RJ10 50cm WLIC15:1:1 RJ10 150 cm WLIC20:1:1 RJ10 200 cm
Communication jack X16	S-SUB9 (RS232)
Potential free In / OutputX13	Phoenix MC1,5/3-g-3,81 Mating Plug: MC1,5/3-ST-3,81 (Order Nr XPMC33)
Signals X14	Phoenix MC1,5/6-g-3,81 Mating Plug: MC1,5/6-ST-3,81 (Order Nr XPMC36)

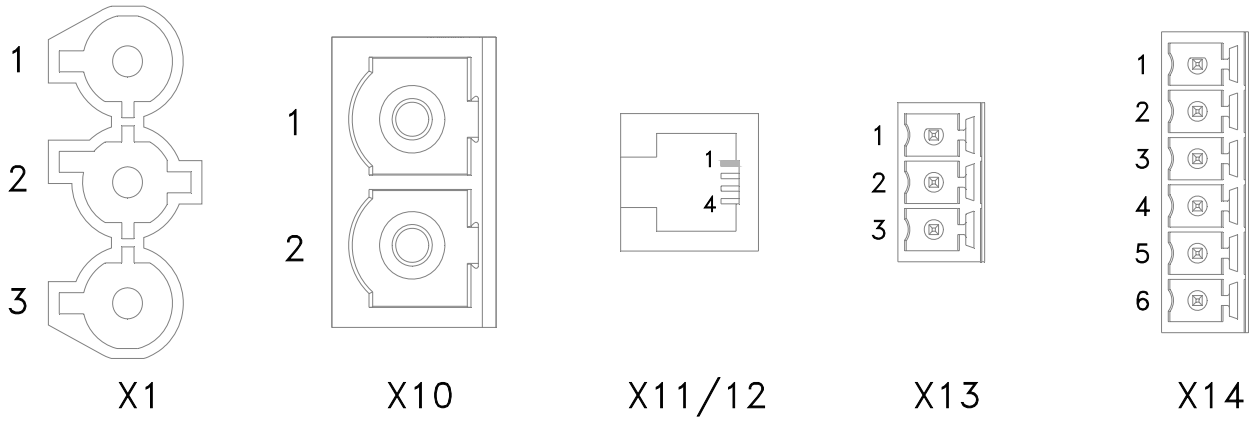

Input connector X1

1	L
2	PE
3	N

Output connector X10

1	DC+
2	DC-

Communication jack X11/X12* potential free

	I²C (Standard)	CAN (acc. CiA 303-1; Optional instead of I²C)
1	SDA	+24V
2	GND	CANH
3	UH	CANL
4	SCL	GND

* X11 and X12 are connected 1:1 for bus use

Potential free in- / output X13 (Optional)

	Option Error Relay	Option Remote On/Off (potential free)
1	NO	nc
2	NC	R_On_Off+
3	COM	R_On_Off-

X13 can be configured as potential free output (e.g.: Error, Power Good) or potential free input (e. g.: Remote On/Off) according to customer's needs.

Signal X14 (Optional)

Signals	Options
1	Sync Out, Sync In, Remote On/Off (Digital IO, PWM out, Schmittrigger input)
2	TxD, Sync In, Sense-, Uist (Digital IO, Analogue Out)
3	RxD, Sense+, Iist (Digital IO, Analogue Out)
4	Uset, (Analogue input, Digital Iin)
5	Iset, (Analogue input, Digital IO)
6	Gnd

RS232 X16 (Optional)

Pin 1, 4, 5, 6, 9	NC
Pin 2	TxD (Output)
Pin 3	RxD (Input)
Pin 7	CTS (Input, not in use)
Pin 8	RTS (Output, not in use)

QUEL Produktions- und Vertriebs-GmbH
Hans-Sachs-Str. 2, 63755 Alzenau

Phone +49 (6023) 9798-0, Fax: +49 (6023) 9798-18
Email: info@quel.de, Internet: www.quel.de

Subject to change. Data sheet **E3k**. Mod. 1 of 24.11.2017
DS_E3k.doc
Author: TH